California Polytechnic State University Pomona
DEPARTMENT OF ELECTRICAL & COMPUTER ENGINEERING

Circuit Analysis 2 Laboratory

ECE 2101L-03
Report #8

LAB 8 – AC Thevenin's & Norton

Prepared by
Kevyn Santos & Kaung Nyi Naing

Presented to
Sasoun Torousian

March 21, 2024

Introduction:

In this lab experiment, we will be examining an AC circuit, and comparing it to its Thevenin's equivalent. It is important to review Thevenin's and Norton's theorems to complete this lab successfully. Thevenin's theorem states that we can simplify any two terminal circuits to have a single voltage source in series with an impedance. Norton's theorem is super similar, it states that any circuit can be replaced by a single current source in parallel with an impedance. For our lab, we will be measuring $V_{Thevenin}$ at an isolated portion of the circuit. We will also be measuring I_{Norton} using a 10Ω sense resistor. Using these measurements we can find $Z_{Thevenin}$ by dividing $V_{Thevenin}$ by I_{Norton}.

Pre Lab:

1- Obtain the Thevenin

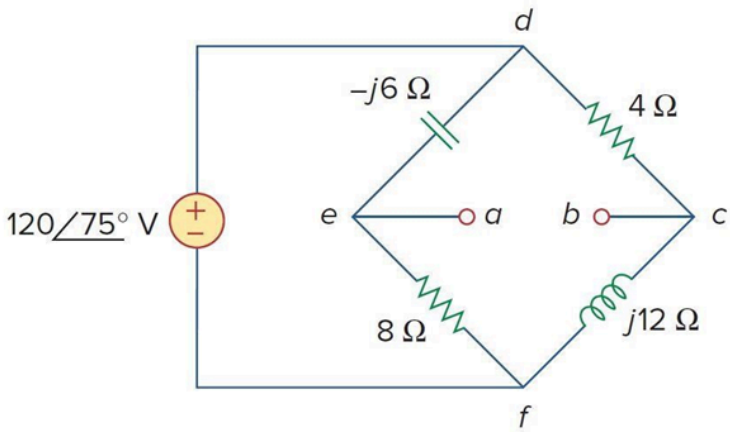

Figure A

Zth=(8 // -j6) + (4 // j12) = 6.48-2.64j Ohms

Vth = -28.9391 - 24.5464j V

(1) .47 µF actual: .47uF **(1) 1.0 k actual:1.0k**

(1) 10 actual: 10 **(1) 1.5 k actual:1.5k**

(1) 2.2 k actual: 2.2k

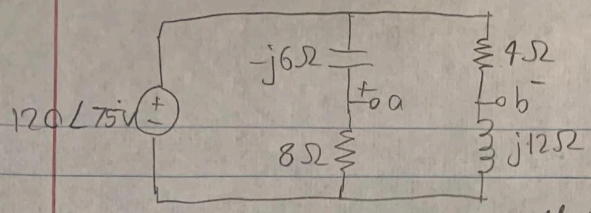

Z_{th}

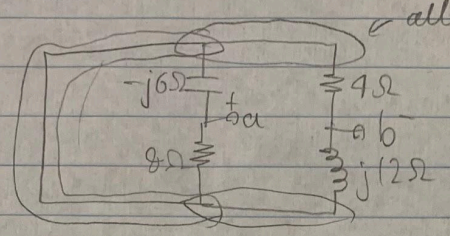

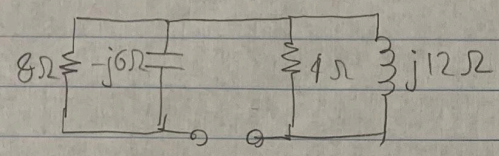

$Z_{th} = (8 // -j6) + (4 // j12)$
$= 6.48 - 2.46j\ \Omega$

V_{th}

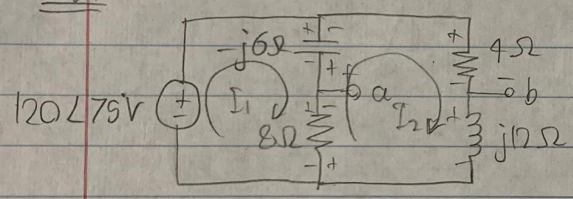

KVL at mesh I_1

$120\angle 75^\circ + (I_1 - I_2)j6 - (I_1 - I_2)8 = 0$

KVL at mesh I_2

$-8(I_2 - I_1) + j6(I_2 - I_1) - 4I_2 - I_2 j12 = 0$

$I_1 = 4.9998 + 11.7048j\ A$
$I_2 = 9.4698 + 0.5684j\ A$

$V_a = 8(I_1 - I_2) = -35.76 + 89.091j\ V$
$V_b = I_2 \times 12j = -6.8209 + 113.6379j\ V$

$V_{th} = V_a - V_b = -28.9391 - 24.5464j\ V$

Lab:

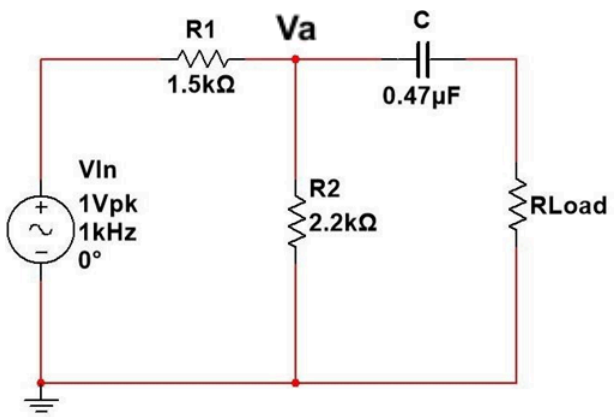

Figure 1

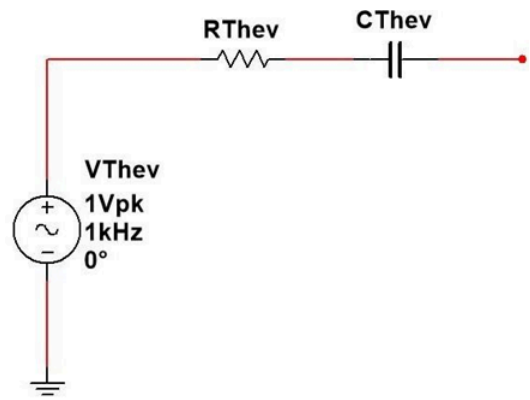

Figure 2

Original Circuit

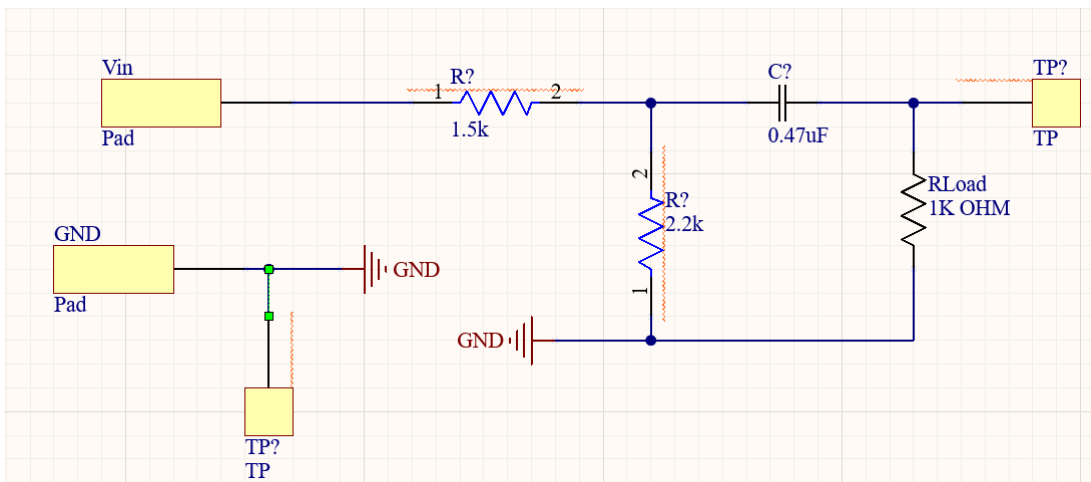

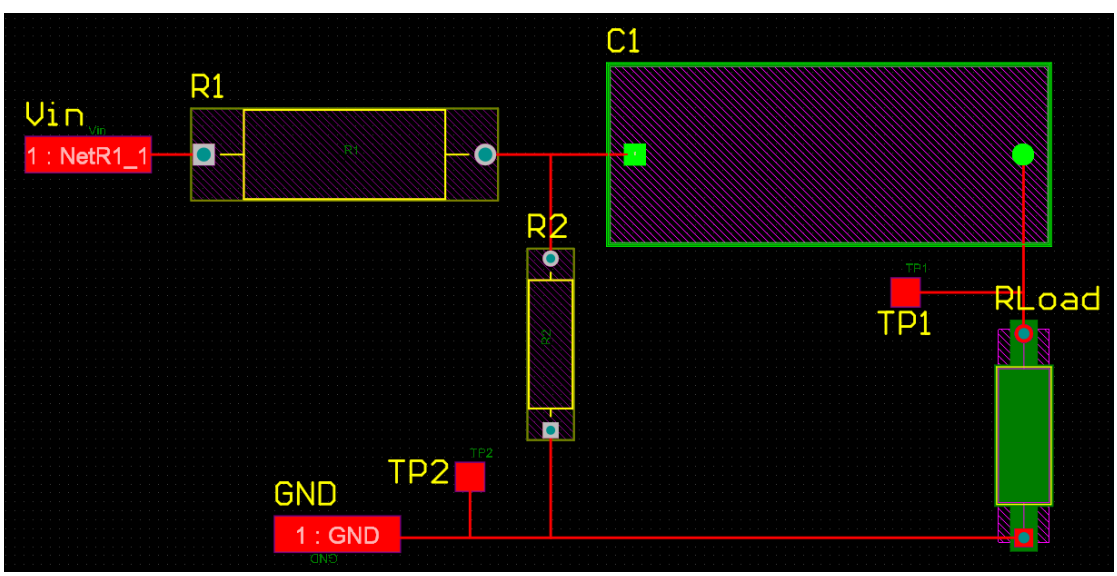

Figure 3 & 4: PCB Design of the Original Circuit

Simulation

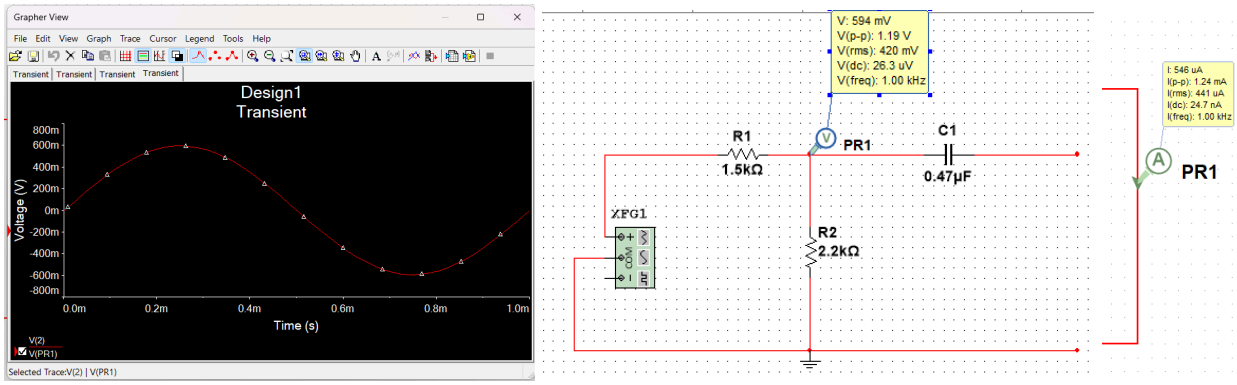

Figure 5, 6 & 8: Thevenin Voltage and Norton Current Simulation

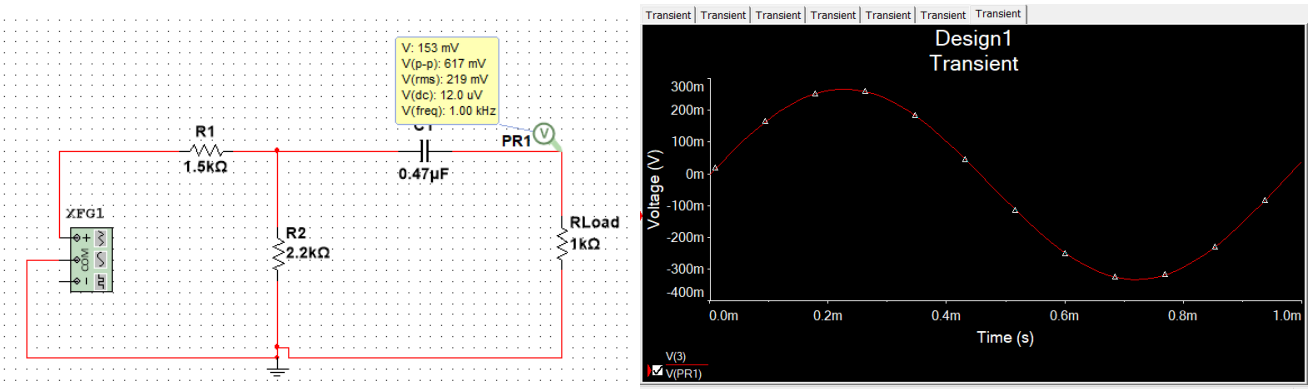

Figure 9 & 10: Load Voltage Simulation

Thevenin Circuit

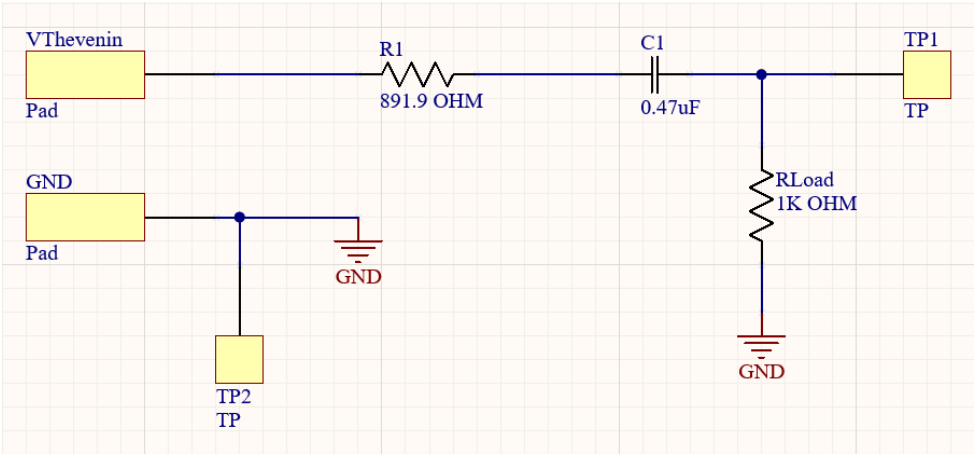

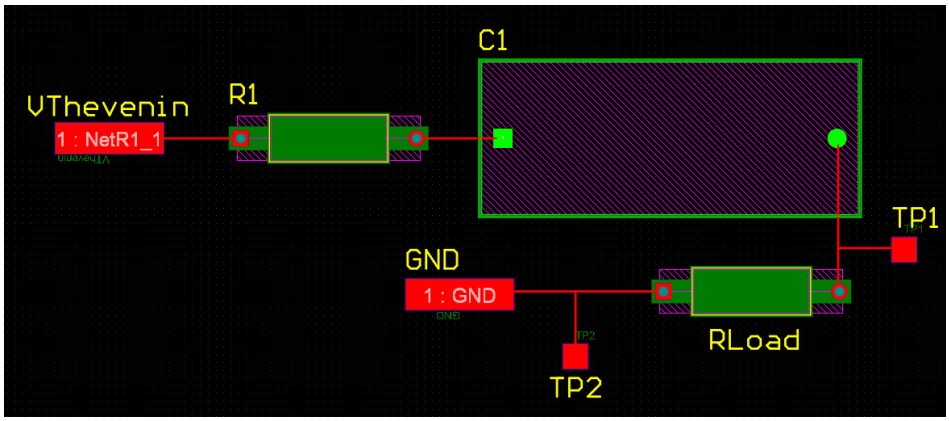

Figure 11 & 12: PCB Design of the Thevenin Circuit

Simulation

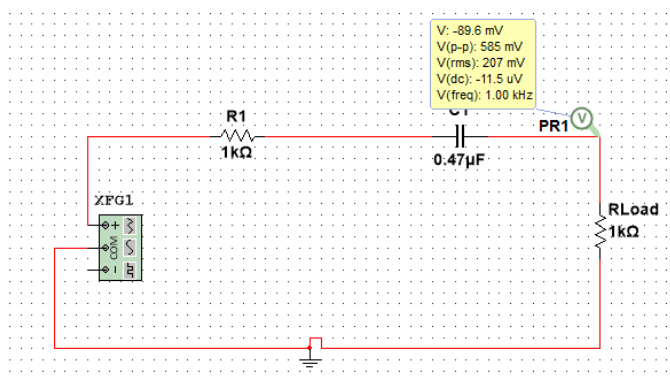

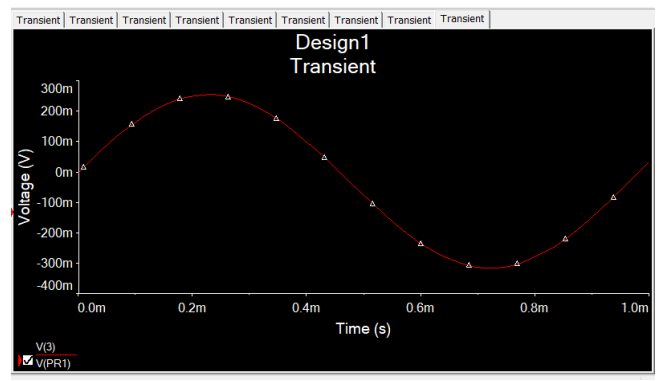

Figure 13 & 14: Thevenin Load Voltage Simulation

Calculations

Thevenin: R_{Load} = 1 kΩ, C = .47 µF, R_1 = 1.5 kΩ, R_2 = 2.2 kΩ V_{in},= 2 $V_{p\text{-}p}$, Freq. = 1 kHz

$R_P = R_1 \parallel R_2$	$\frac{1.5k*2.2k}{1.5k+2.2k} = 891.8919 \angle 0\ \Omega$
Include Phase Angle $X_C =$	j*w*C = j*2*pi*1k*.47u= -j338.63 Ω
Include Phase Angle $Z_{Thevenin} = R_P + X_C$	= 891.8919-j338.63 Ω = 954.0125 ∠ -20.7904 Ω
Include Phase Angle $V_{Thevenin} =$	$Vin*\frac{R2}{R1+R2} = 1.1892 \angle 0$ V

Norton:

Include Phase Angle $I_{Norton} =$	$\frac{Vth}{Zth}$ = 1.2465 ∠ 20.79043 mA

V_{Load}:

Za	(Rload+ZC) // R2 = 704.25 - j158.28 Ω
Va	Vin*$\frac{Za}{R1+Za}$ = 0.6460 - j0.0972 V
Include Phase Angle $V_{Load} =$	Va*$\frac{Rload}{ZC+Rload}$ = 0.6091 + j0.1090 V = 0.6187∠10.1478 V

$R_{Thevenin}$: Leave $C_{Thevenin}$ = .47 μF

Include Phase Angle RThevenin = ZThevenin - XC	891.8919 ∠ 0 Ω

Data Tables

	Voltage (V)	Phase Angle (degrees)
V_{load} Theory	0.6187	10.1478
V_{load} Original	0.603	10.3
V_{load} Thevenin	0.620	10.5
% Deviation	2.54 %	-1.4998

Table 1

	Theory		Experimental		% Deviation	
	Magnitude	Phase	Magnitude	Phase	Magnitude	Phase
$V_{Thevenin}$	1.1892 V	0°	1.183 V	0 °	0.52%	0%
I_{Norton}	1.2465 mA	20.7904°	1.176 mA	21.1°	5.66%	-1.49%

$Z_{Thevenin}$	954.0125 Ω	-20.7904°	1005.952 Ω	-21.1°	-5.44%	-1.49%

Table 2

Post Lab

1- Find the Thevenin equivalent of circuit in Fig B as seen from terminal a-b.

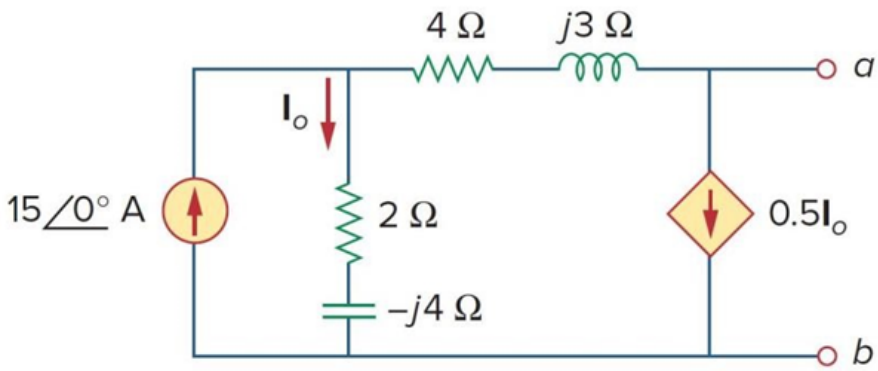

Figure B

Post Lab

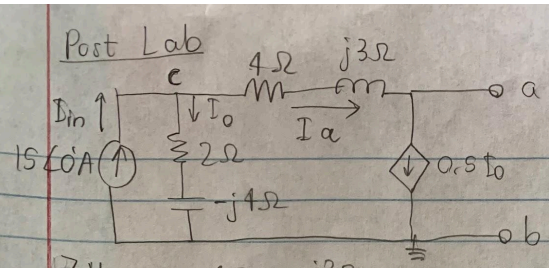

Zth

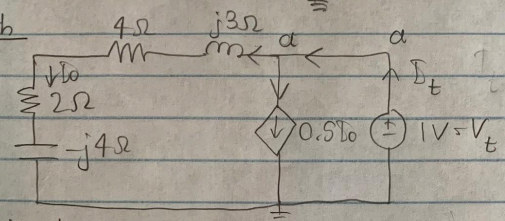

KCL at node a

$I_t - I_o - 0.5I_o = 0$

$I_t = 1.5I_o = 1.5 \times \frac{1V}{Z_a}$

$Z_a = j3 + 4 + 2 - j4$
$= 6 - j\Omega$

$I_t = 0.2432 + 0.0405j$ A

$Z_{th} = \frac{V_t}{I_t} = \frac{1}{I_t} = 4 - 0.6667j\,\Omega$
$= 4.0552 \angle -9.4623^\circ\,\Omega$

V_{th} KCL at node c

$I_{in} - I_o - I_a = 0$

$I_{in} - \frac{V_c}{2-j4} - \frac{(V_c - V_a)}{4+j3} = 0$

KCL at node a

$I_a - 0.5I_o = 0$

$\frac{V_c - V_a}{4+j3} - \frac{0.5V_c}{2-j4} = 0$

Solving the eqs result in: $V_a = -55j$ V, $V_c = 20 - 40j$ V

$V_a = V_{th} = -55j$ V $= 55 \angle -90^\circ$ V

Conclusion

For this lab, we began by calculating all of our theoretical values so that we could have an idea as to what our experimental values should look like. Once we build our circuit, we measure our experimental load voltage and phase angle. Then, we measured the unloaded output voltage, which is our experimental Thevenin voltage. Our next step was we put a 10Ω sense resistor and measure output voltage and phase angle. After we divide the output voltage by 10Ω it gives us our Norton current. When we divide our Thevenin voltage by Norton current, it gives us the experimental Thevenin impedance. All that was left was R thevenin which we could get by subtracting Thevenin impedance by Capacitor impedance. Having all these values, we can build the Thevenin equivalent circuit and compare it to our initial circuit. Overall, this lab helped us analyze circuits and simplify them. We were able to confirm the equivalence of both circuits with little deviation successfully.